ISSUE No & DATE	DETAILS OF CHANGE. MODIFICATION RECORD NUMBER. ECR NUMBER.
02.03.15	NEW DRAWING

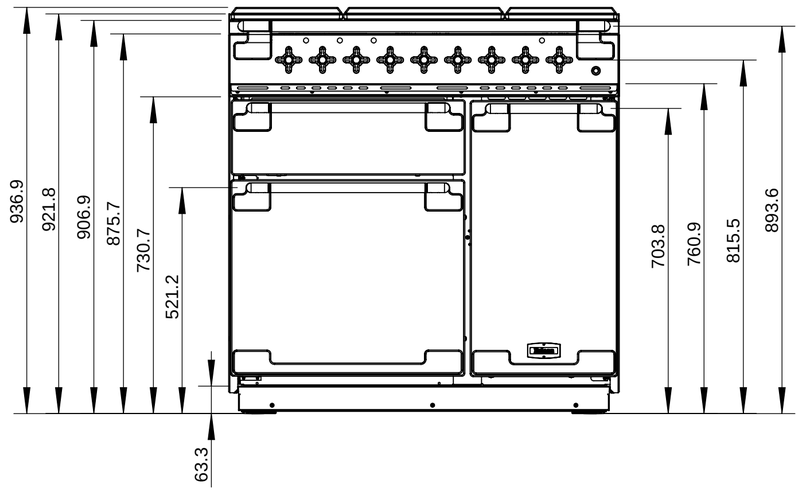

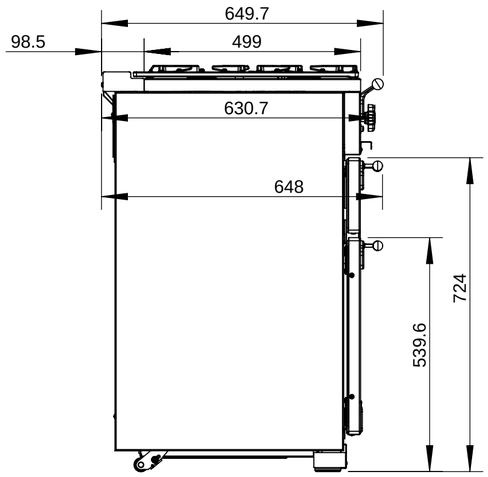

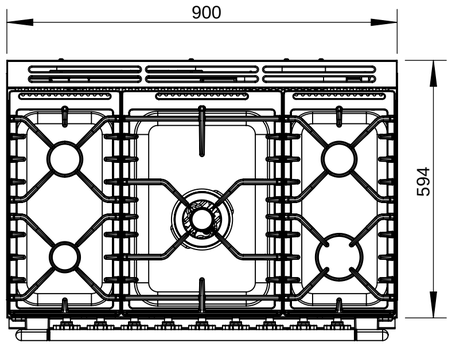

AGA RANGEmaster

Clarence Street, Royal Leamington Spa
Warwickshire CV31 2AD, United Kingdom
Telephone: 44 (0)1926 457400
Direct Fax: 44 (0)1926 457611
Web: www.agarangemaster.co.uk

DO NOT SCALE OR GUESS. IF IN DOUBT, ASK.
ALL MATERIALS MUST COMPLY WITH RoHS & REACH

ALL MACHINING TO BE FREE FROM BURRS.
TOLERANCES UNLESS OTHERWISE STATED:-
ANGULAR ±30'
LINEAR DIMENSIONS WHOLE NUMBERS ±0.5
ONE DECIMAL PLACE ±0.15
CIRCULAR HOLES ±0.15
CNC BEND RADII 1.25 +1 -0
CNC BEND ANGLES ±2°

ALL DIMENSIONS IN MILLIMETRES

PROJECTION

A2 DRAWING BORDER CREATED 01/08/2012 BY DJB

MATERIAL AND FINISH SPECIFICATION

THIS DRAWING IS THE PROPERTY OF RANGEMASTER AND REPRODUCTION IN WHOLE OR PART MAY NOT BE MADE WITHOUT THEIR WRITTEN CONSENT.

DRAWN	PROJECT	ASSEMBLY
NV	10840	
SCALE		

TITLE

ELISE 90 DF

PART NUMBER

A0010840